Documentation of the producer
According to EN 1317:5 standard point 5.2 Product description

Equipment and employees
The Contractor should produce evidence that he has the possibility to use special equipment to assemble and transport barriers, which is safe to use. The team performing road works should be under continuous supervision, executed by a properly qualified employee. The Contractor shall equip employees with means of individual protection. Vehicle marking and protection of the working place should be compliant with current legal regulations binding in the place where works are performed.

Materials
Materials should be compliant with requirements stated in Documentation of the Manufacturer.

Individual barrier elements are packed in bundles with size depending on the weight of elements and the size of the commission. Small barrier elements are delivered in containers or cases.

Each bundle or case shall have a tag including at least the following information:
- name and address of the producer,
- name of the product, together with the name and marking of the element,
- date of production,
- weight of the bundle, container or case,
- number of items in one delivery

Barrier elements should be stored in places and conditions, in which they shall not be exposed to mechanical defects or intensive corrosion.

Stages of assembly works
Assembly works include the following stages:
1) **Preparatory works and measurements** (indication of barrier road with verification of the course of underground installations, determination of posts location, indication of possible passage routes, crossings as well as final and initial barrier sections)
2) **Placing posts of the protective barriers system** – placing posts within the distance from the edge of the road stated in Project Documentation. During this stage of works it is essential to verify settlement, height and distance between posts. In case when placing posts of protective barriers system shall be executed by vibrating, due to cyclical blows of the pile-driver head on the head of the post, deformation and partial damage of the galvanized layer on the post is allowed. The scope of deformations and damages of the galvanized layer depends on the soil class and the degree of its concentration. This is a common phenomenon

and therefore it does not signify the quality of works. In such cases the damaged galvanized layer is repaired with zinc paint. The deformed head of the post cannot be cut.

3) **Assembly of protective barriers system** – Assembly of protective barrier elements should be made according to Documentation of the Producer and Project Documentation. When assembling protective barriers system it is forbidden to make any holes or cuts violating the galvanized layer of particular elements. Assembly of protective road barriers includes:
   a) assembly of distancing elements within the protective barriers system with the use of appropriate joining elements,
   b) assembly of guides for distancing elements with the use of appropriate joining elements. During this stage of works adjoining segments of guides need to be connected according to the direction of vehicle movement, in a way, which in case of accident will enable the vehicle to slide along protective barriers system without touching edges of the guides,
   c) assembly of initial and final segments of protective barriers system
   d) regulation of joining element's tightening moment
   e) checking the continuity of galvanized surface and repair of possible damages
   f) fixing reflective elements on protective barriers system.
4) **Quality control of the works** should include:
   a) verifying the compliance between the assembly of protective barriers system with Project Documentation and Documentation of the Producer, with consideration of possible size deviations,
   b) test of galvanized layer thickness and its appearance
5) **Site arrangement**

Technical specification for road restraint system SP - 07/4 on ground:

Steel quality: S235JR in accordance with EN 10025-2
Hot-dip zinc coating:
- in accordance with EN ISO 1461
- continuous method according to EN 10346

Bolts:
Bolts in accordance with EN ISO 898-1
- M 10 x 25 according to EN ISO 4017; property class 5.8
- M 16 x 25 according to drawing (appendix); property class 4.6
- M 16 x 40 according to drawing (appendix); property class 4.6

Nuts according to EN ISO 4032
Washers according to EN ISO 7091
Tightening torque of the bolts:
- M 10 - T = 40 $\pm$ 10 [Nm]
- M 16 - T = 70 $\pm$ 10 [Nm]

3 double outriggers were detached during test TB42. Weight of each 7.5kg.

The local change in post spacing is allowed in compliance with Technical Opinion No IDM-TO/335/7792/2014 issued by Road and Bridge Research Institute.

Sequence of assembly in accordance with attached drawings:

SP-07/4 - Assembly drawing safety barrier SP-07/4
SP-07/4 - Double side safety barrier SP-07/4 (Single section)
SP-07/4 - Terminal for system SP-07/4
SP-07/4 - Double side safety barrier SP-07/4
SP-07/4 - Assembly of bolt M16x40 for system SP-07/4
SP-07/4 - Assembly of bolt M16x25 for system SP-07/4
SP-07/4 - Assembly of bolt M16x25 (outrigger) for system SP-07/4
SP-07/4 - Assembly of bolt M10x25 for system SP-07/4
Bolt M16xL

The tolerance for height of the top of the system is ±20mm.

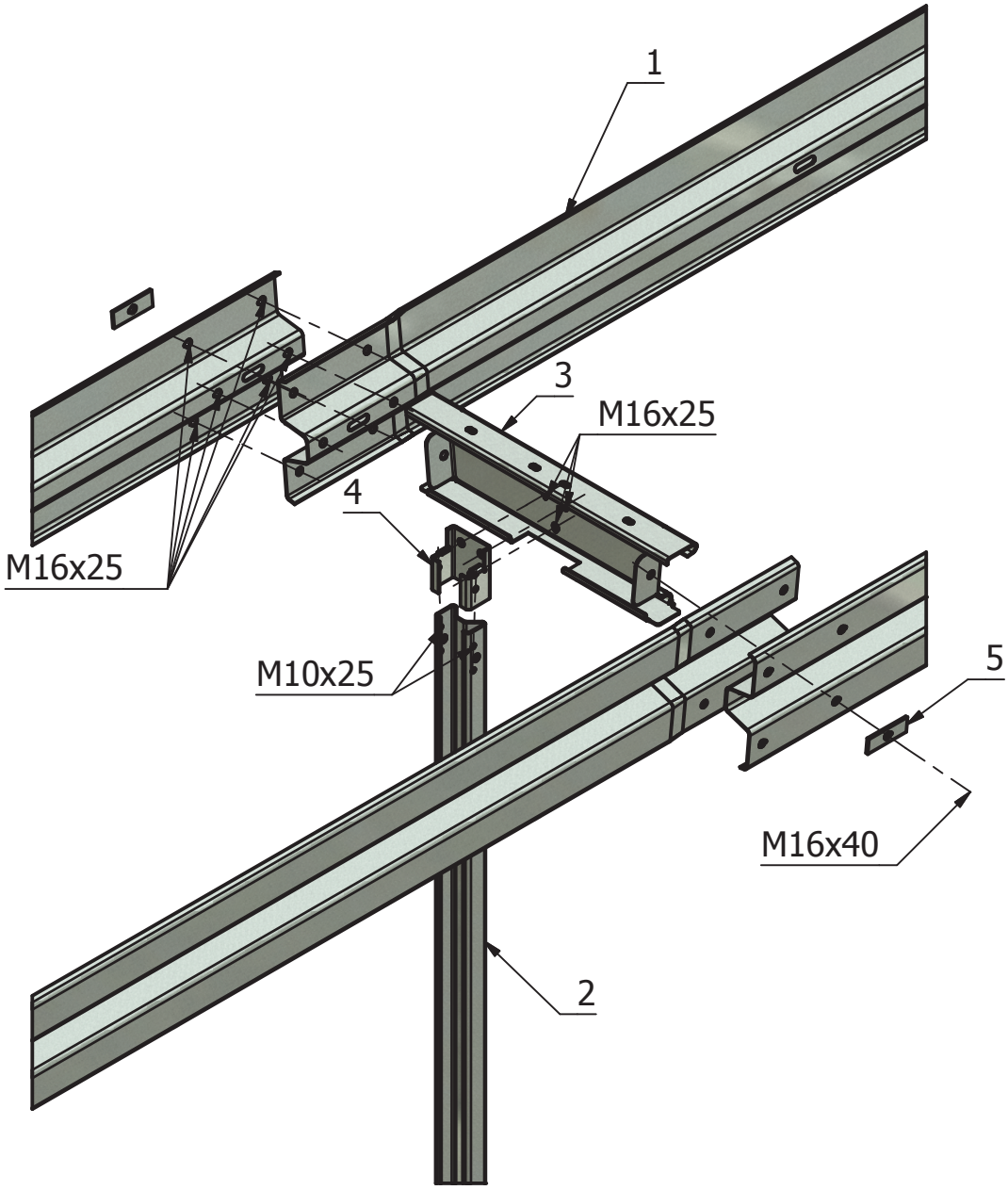

List of elements:
1. Guardrail type B
2. Sigma post
3. Double outrigger 780
4. Connecting sleeve
5. Washer M16

Drawing name Assembly drawing safety barrier SP-07/4		Mass -	INVENTOR	Change drawing No
Archive index	Number of drawing SP-07/4		Sheet No 1 Amount 1	Substituted by
STALPRODUKT S.A. - BOCHNIA				

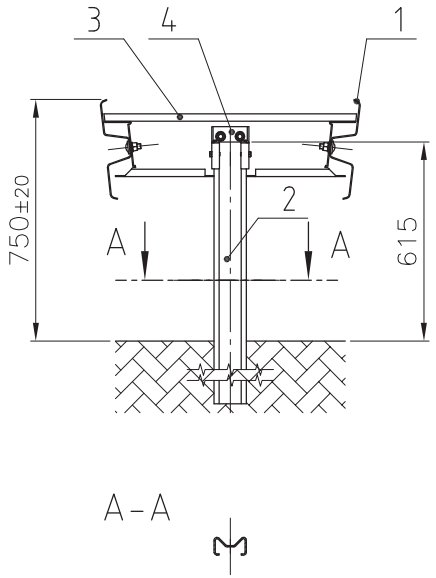

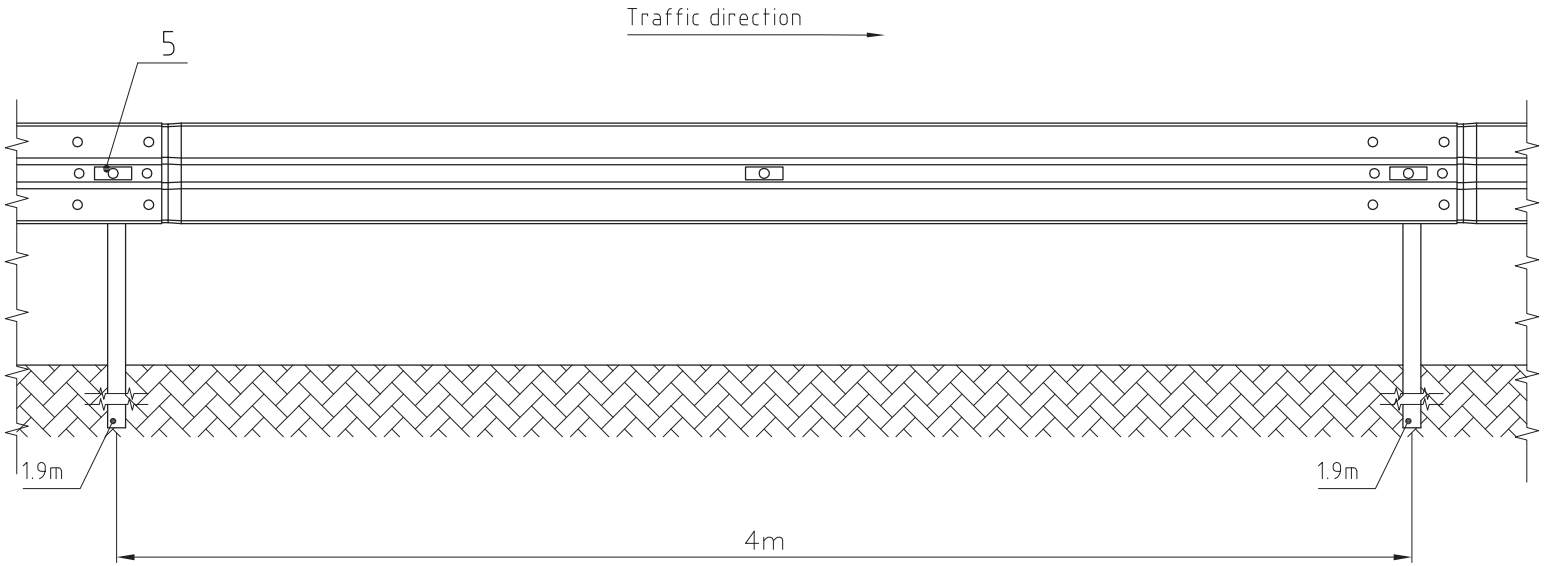

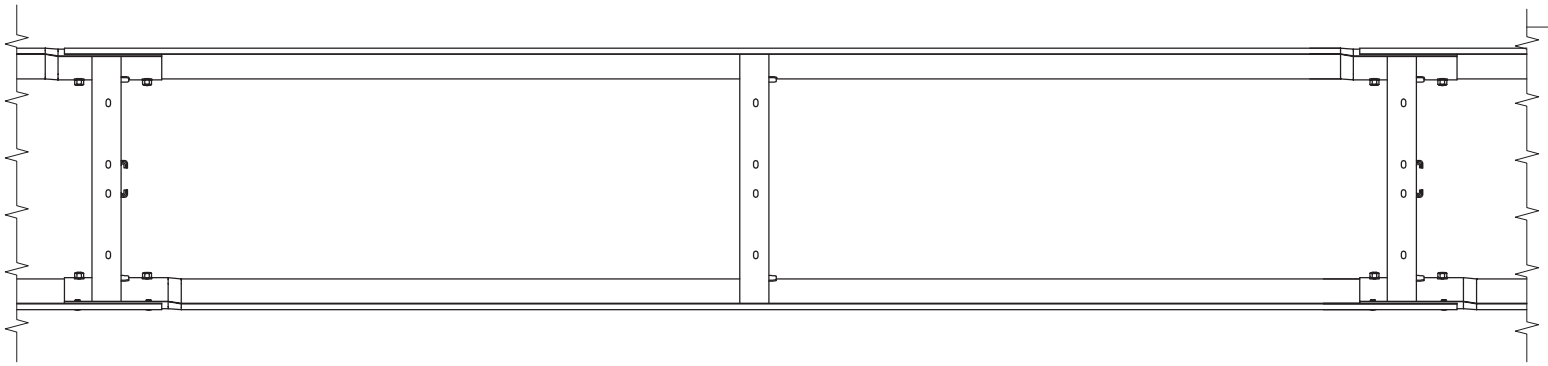

List of elements:
1.Guardrail type B
2.Sigma Post
3.Double outrigger 780
4.Connecting sleeve
5.Washer M16

Drawing name Double side safety barrier SP-07/4 (Single section)		Mass	AutoCAD	Change drawing No
	Archive index	Number of drawing SP-07/4	Sheet No Amount	Substituted by
STALPRODUKT S.A.				

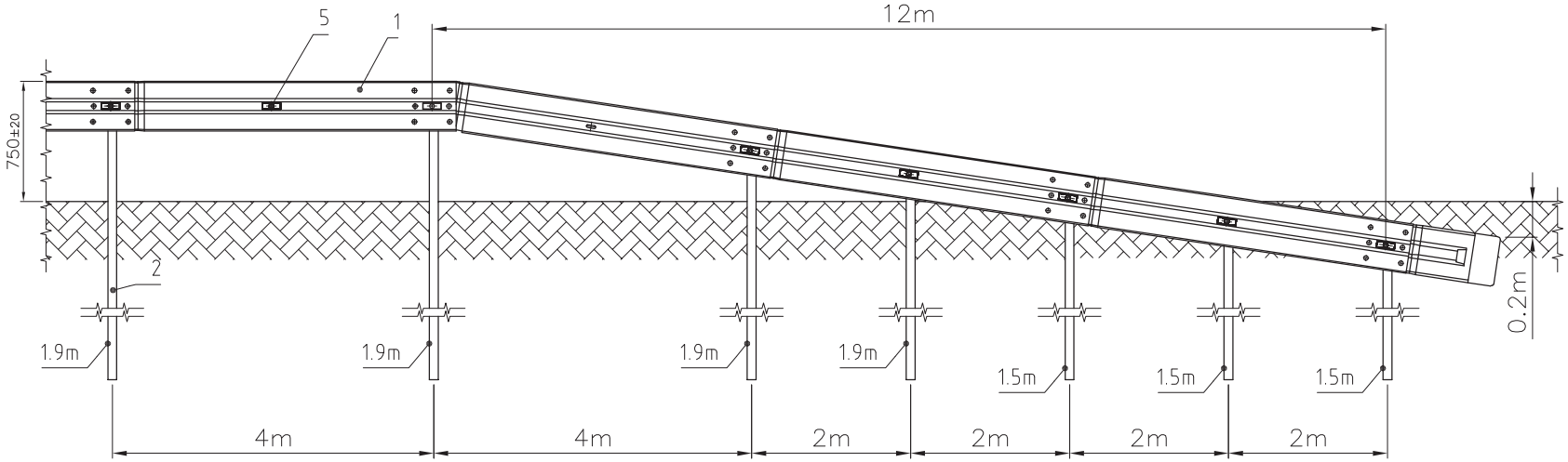

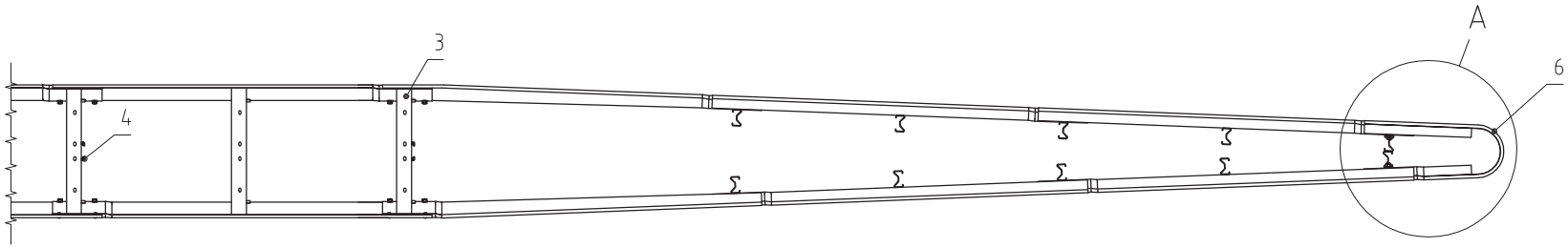

A 1:15

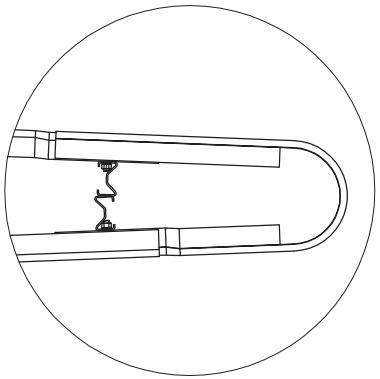

List of elements:

1. Guardrail type B
2. Sigma Post
3. Double outrigger 780
4. Connecting sleeve
5. Washer M16
6. Frontal double joining piece

Drawing name Terminal for system SP–07/4		Mass	AutoCAD	Change drawing No
Archive index	Number of drawing SP–07/4		Sheet No Amount	Substituted by
STALPRODUKT S.A.				

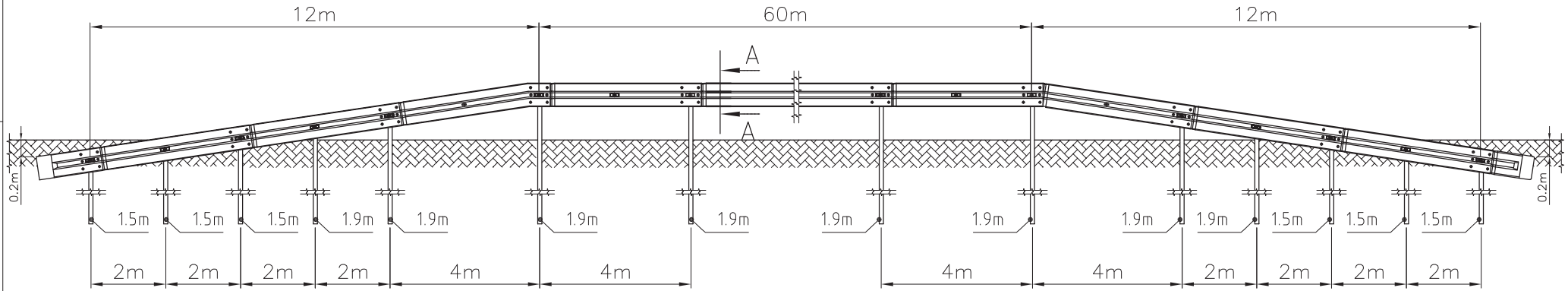

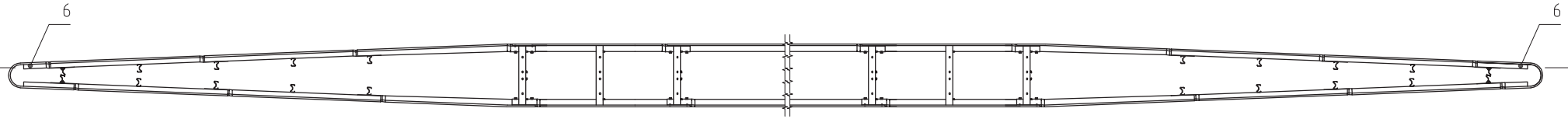

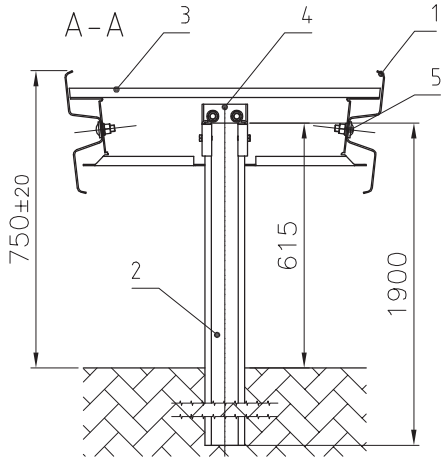

List of elements:
1. Guardrail type B
2. Sigma Post
3. Double outrigger 780
4. Connecting sleeve
5. Washer M16
6. Frontal double joining piece

Drawing name Double side safety barrier SP–07/4		Mass	AutoCAD	Change drawing No
Archive index	Number of drawing SP–07/4		Sheet No Amount	Substituted by
STALPRODUKT S.A.				

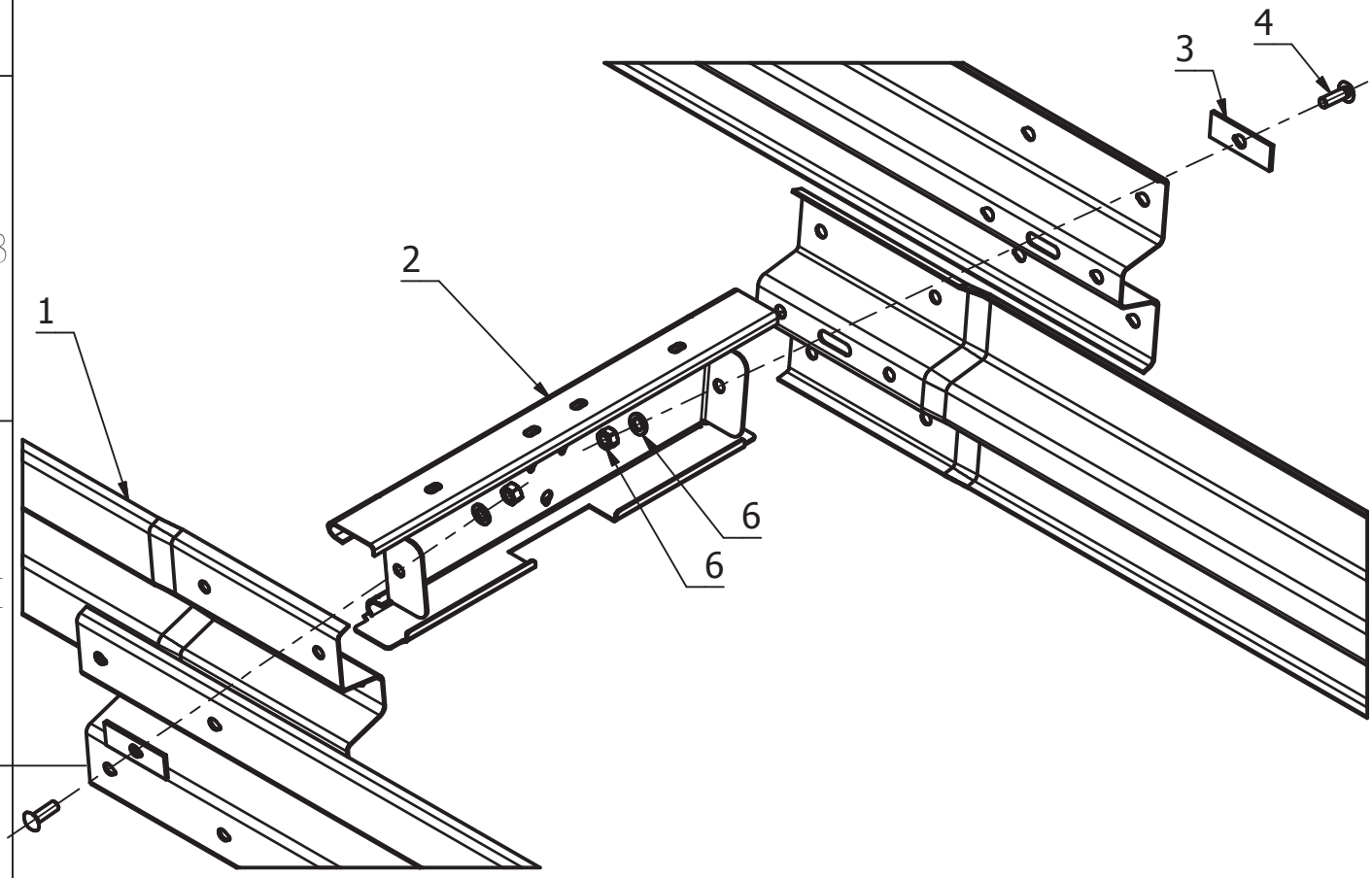

List of elements:

1. Guardrail type B
2. Double Outrigger L-780
3. Washer M16
4. Bolt M16x40
5. Nut M16
6. Round Washer M16

Drawing name Assembly of bolt M16x40 for system SP-07/4		Mass -	INVENTOR	Change drawing No
Archive index	Number of drawing SP-07/4		Sheet No 1 Amount 1	Substituted by
STALPRODUKT S.A. - BOCHNIA				

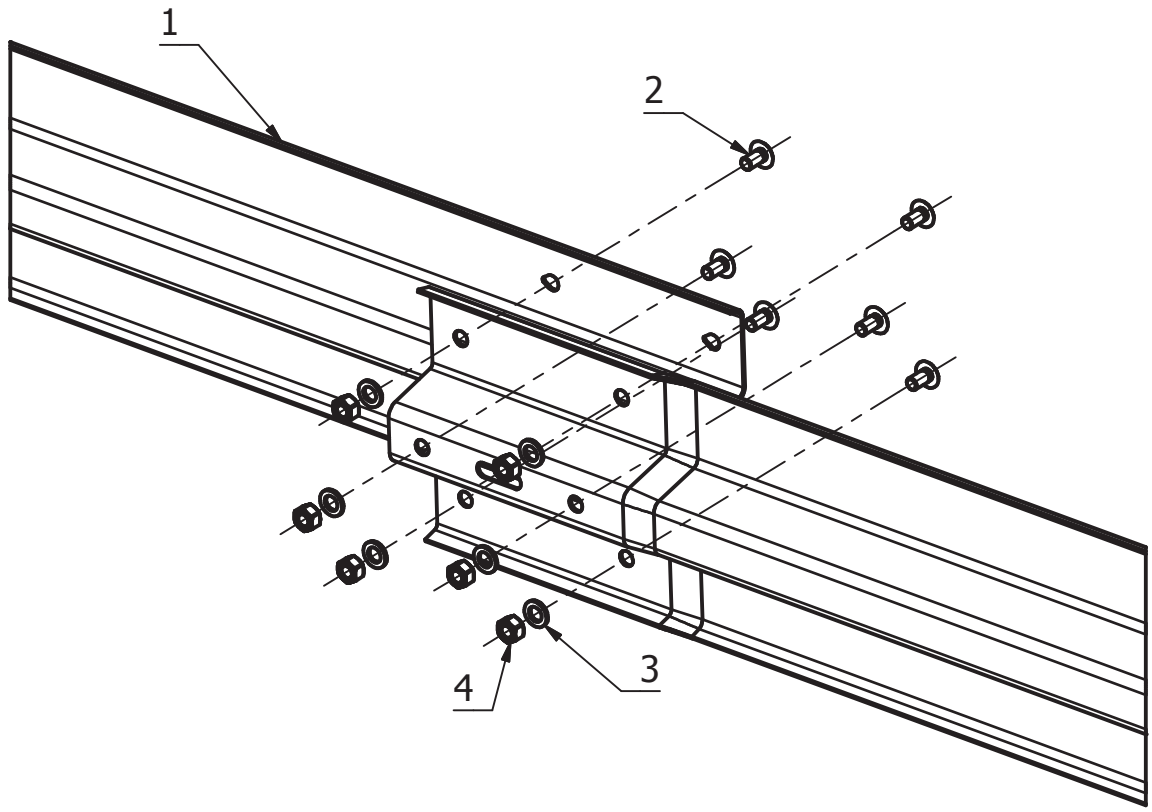

List of elements:
1. Guardrail type B
2. Bolt M16x25
3. Round Washer
4. Nut M16

Drawing name Assembly of bolt M16x25 for system SP-07/4		Mass -	INVENTOR	Change drawing No
Archive index	Number of drawing SP-07/4		Sheet No 1 Amount 1	Substituted by
STALPRODUKT S.A. - BOCHNIA				

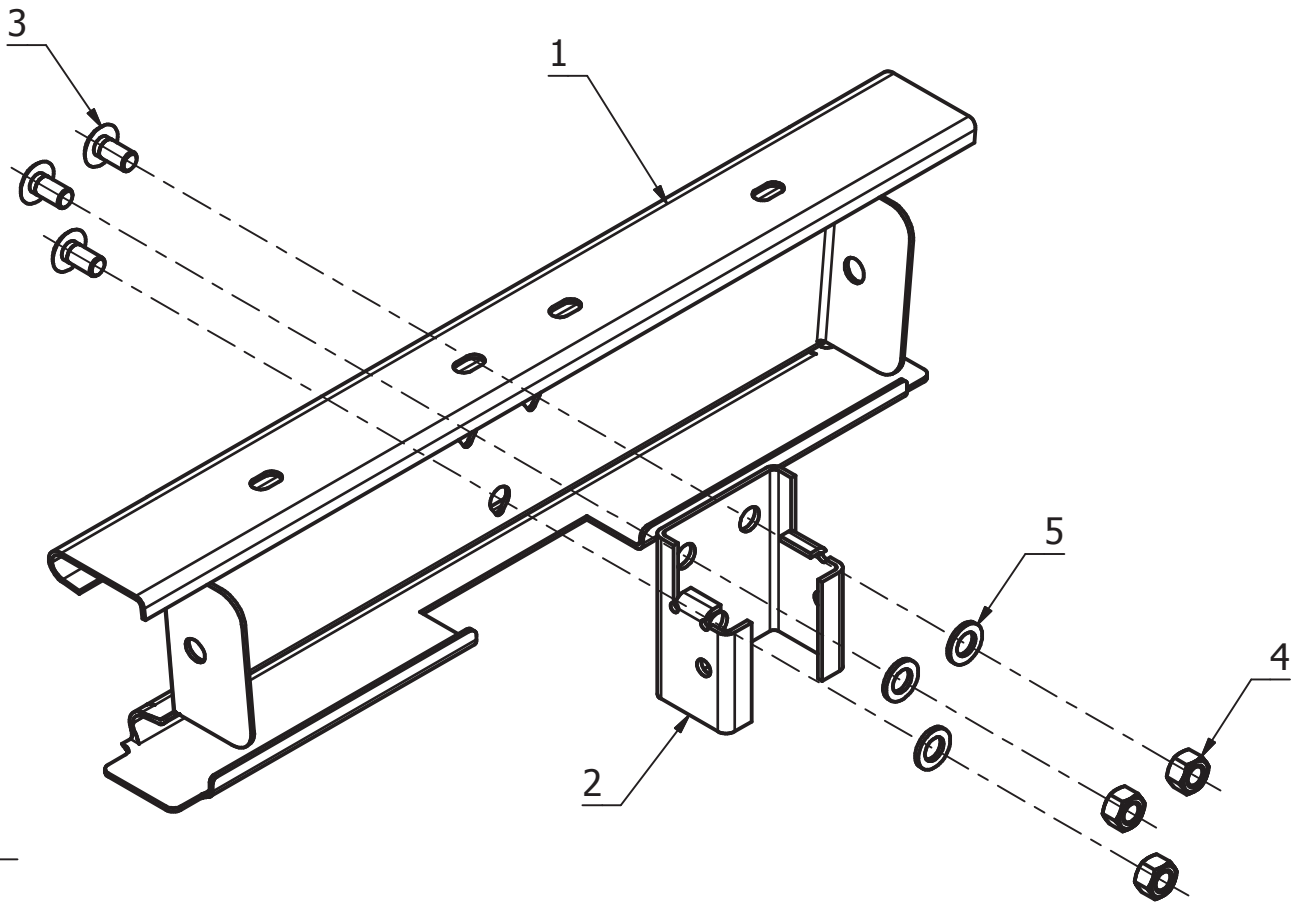

List of elements:
1. Double Outrigger 780
2. Connecting sleeve
3. Bolt M16x25
4. Nut M16
5. Round Washer

Drawing name Assembly of bolt M16x25 (Outrigger-Connecting sleeve) for system SP-07/4		Mass -	INVENTOR	Change drawing No
	Archive index	Number of drawing SP-07/4	Sheet No 1 Amount 1	Substituted by
	STALPRODUKT S.A. - BOCHNIA			

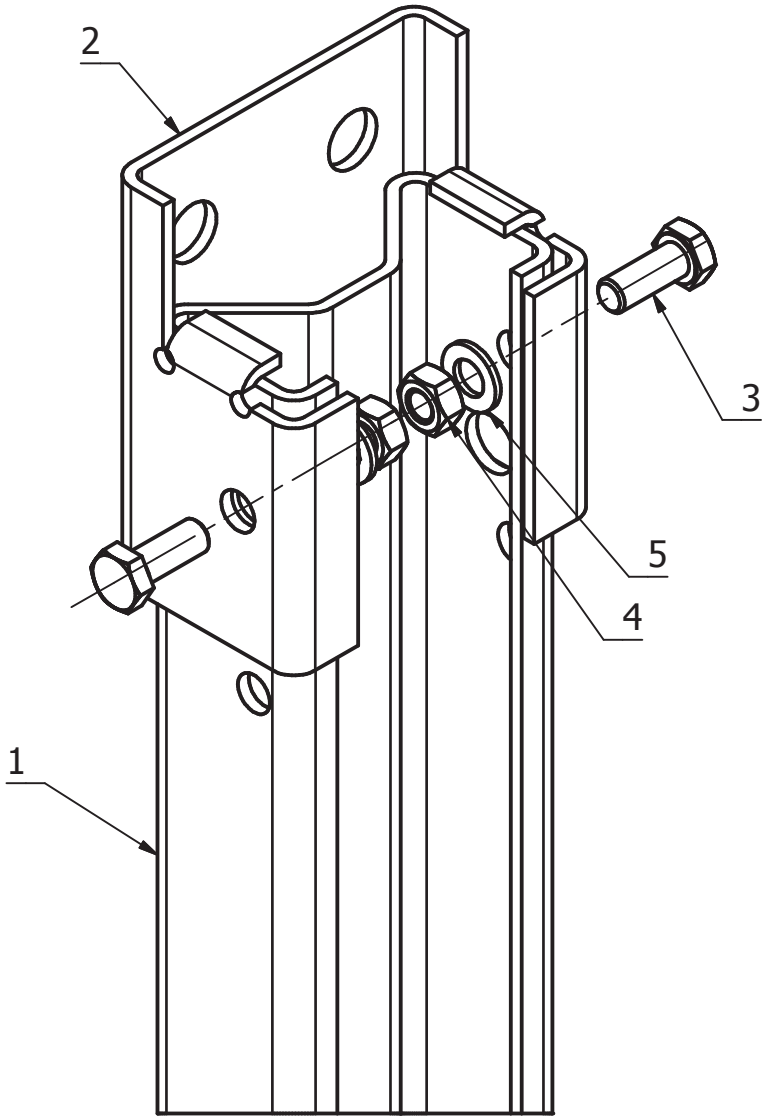

List of elements:
1. Sigma Post
2. Connecting sleeve
3. Bolt M10x25
4. Nut M10
5. Round Washer

Drawing name Assembly of bolt M10x25 for system SP-07/4		Mass -	INVENTOR	Change drawing No
Archive index	Number of drawing SP-07/4		Sheet No 1 Amount 1	Substituted by
STALPRODUKT S.A. - BOCHNIA				

BOLT M16 x L

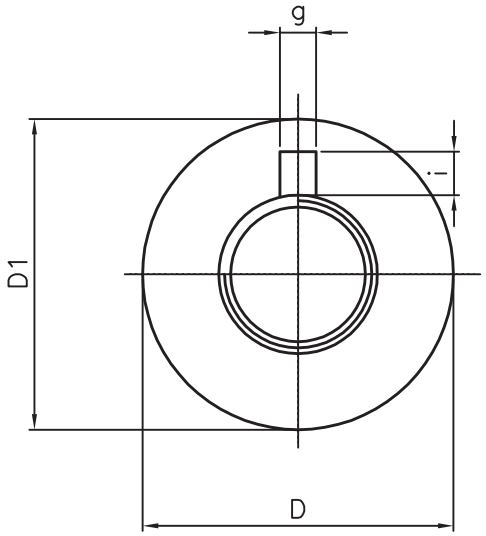

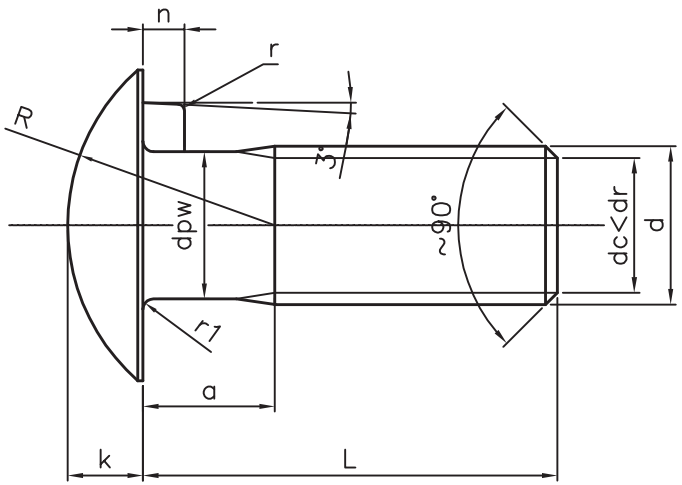

Dimension \ Thread		M16
L		25 or 40
d	min	15.235
	max	15.685
dp	min	14.02
	max	14.22
dr	min	12.904
	max	13.231
dpw	min	14.13
	max	14.20
r	max	1
D	min	29.35
	max	30.65
D1	min	29.0
k	min	7.55
	max	8.45
R	~	20.0
g	min	3,25
	max	3.8
n	min	4.0
	max	4.2
i	min	4.2
r1	~	0.6
a	max	–
dc	max	13.0

Drawing name Bolt M16xL	Mass	AutoCAD	Change drawing No
Archive index	Number of drawing M16xL	Sheet No Amount	Substituted by

STALPRODUKT S.A.